# Round 1 - Thursday, February 17, 2022

SHOTLINK

## LECOM Suncoast Classic

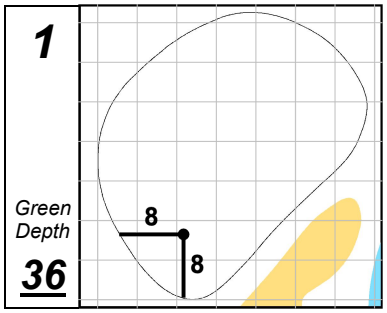


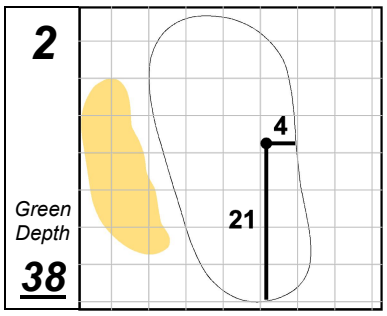


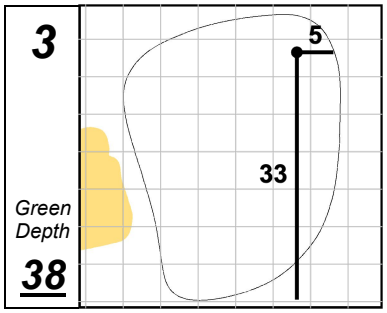


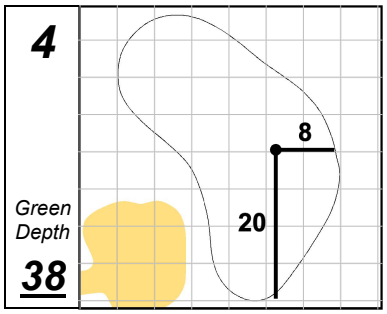


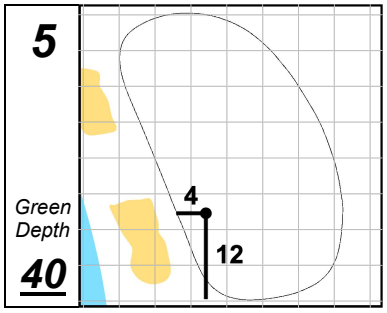


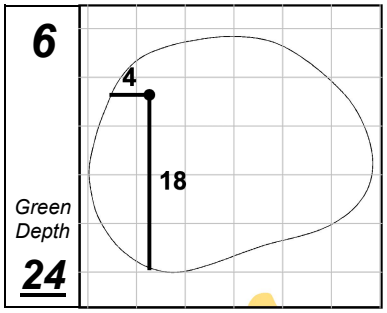


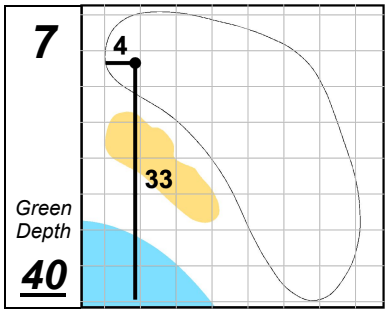


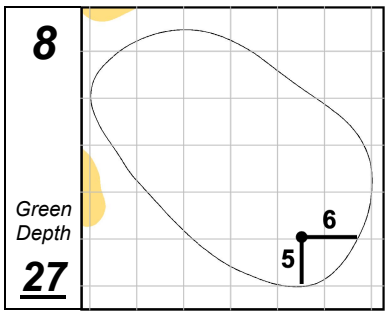


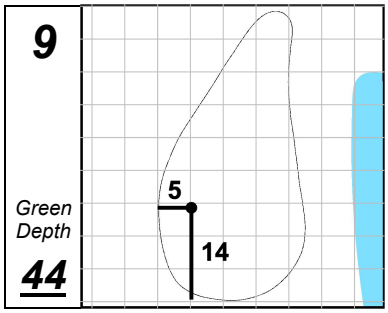


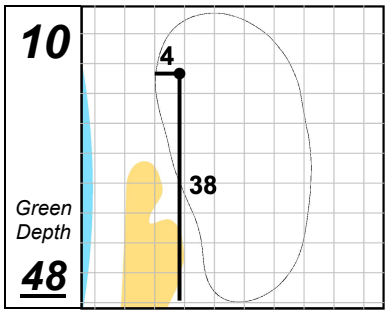


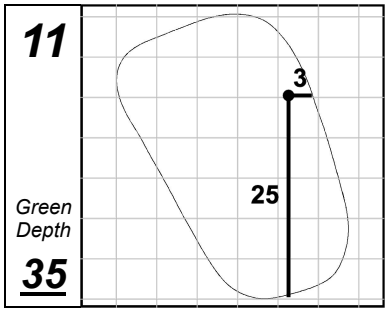


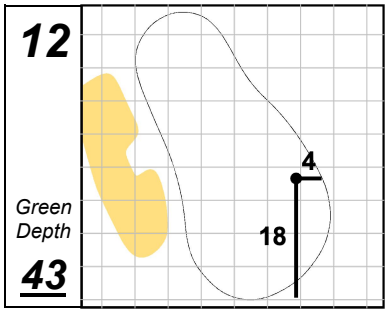


## Lakewood National GC Commander

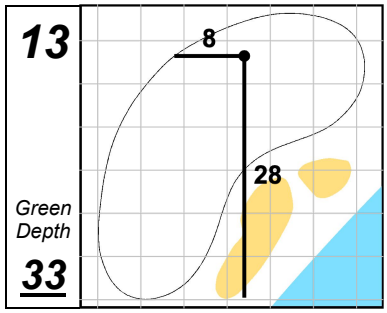


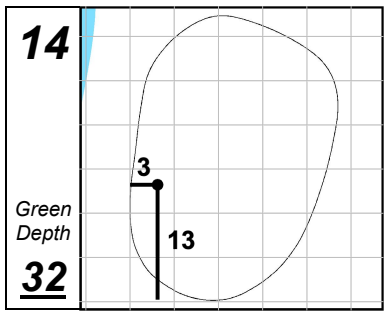


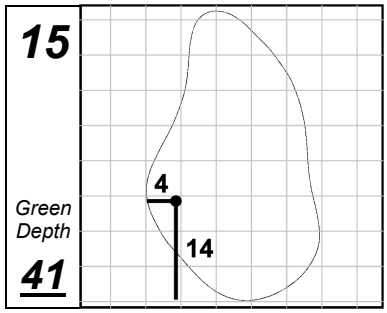


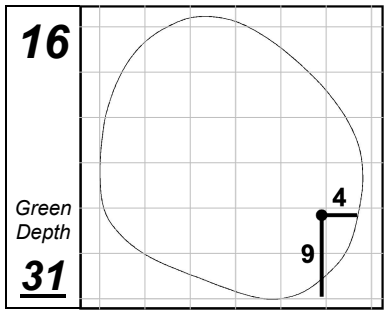


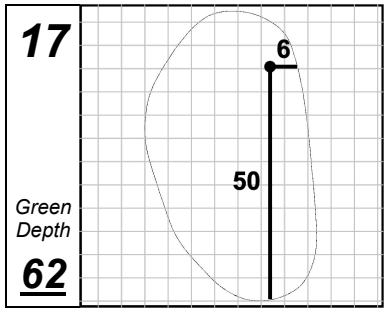


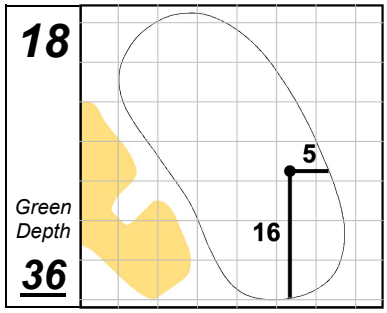


*Each side of a complete square on the green represents 5 YARDS.*

Wednesday, February 16, 2022 2:33:45 PM